Searching a Tree

Saptarshi Pyne, Assistant Professor
Department of Computational and Data Sciences (CDS)
Indian Institute of Science Education and Research (IISER) Kolkata
Mohanpur, West Bengal, India 741246

CS3201 Programming and Data Structures II
February 27, 2025

How to represent a graph (such as a tree) in the computer memory?

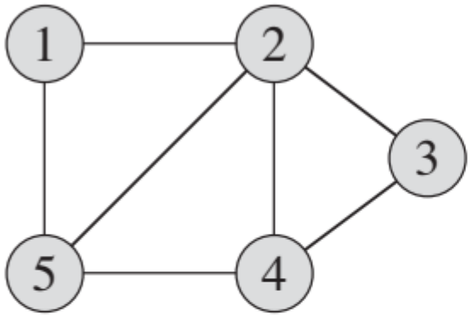

(a)

An array of 5 linked lists

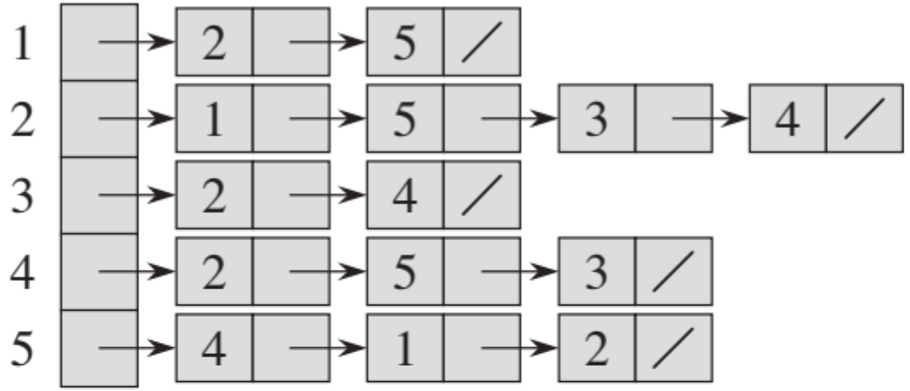

(b)

A 2D array

	1	2	3	4	5
1	0	1	0	0	1
2	1	0	1	1	1
3	0	1	0	1	0
4	0	1	1	0	1
5	1	1	0	1	0

(c)

Figure 22.1 Two representations of an undirected graph. **(a)** An undirected graph G with 5 vertices and 7 edges. **(b)** An adjacency-list representation of G. **(c)** The adjacency-matrix representation of G.

How to represent a graph (such as a tree) in the computer memory?

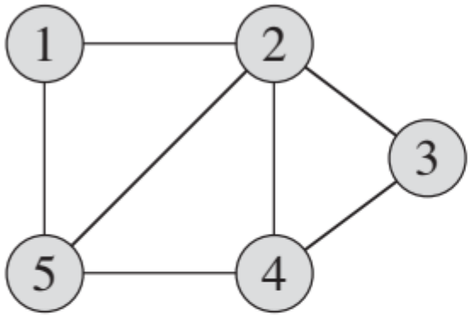

(a)

An array of 5 linked lists

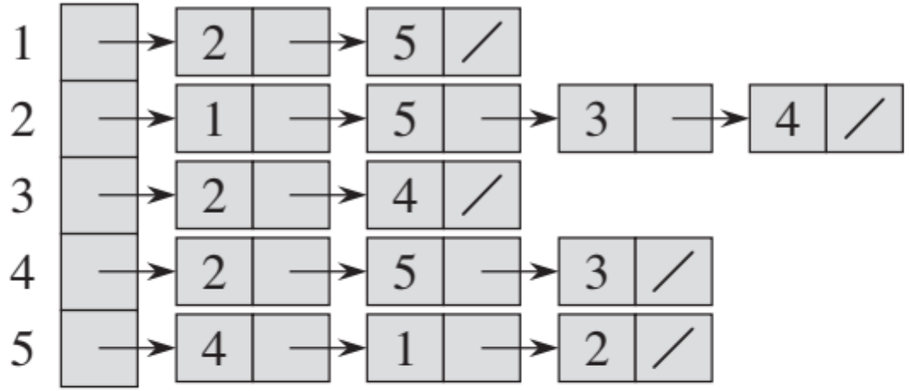

(b)

A 2D array

	1	2	3	4	5
1	0	1	0	0	1
2	1	0	1	1	1
3	0	1	0	1	0
4	0	1	1	0	1
5	1	1	0	1	0

(c)

This is a symmetric matrix

Figure 22.1 Two representations of an undirected graph. **(a)** An undirected graph G with 5 vertices and 7 edges. **(b)** An adjacency-list representation of G. **(c)** The adjacency-matrix representation of G.

Breadth-First Search (BFS)

BFS is a simple algorithm for searching a graph.

The BFS algorithm was independently invented by Edward Moore in 1959 [1] and C. Y. Lee in 1961 [2] for solving two apparently different problems, namely, for finding paths through mazes and routing wires on circuit boards, respectively.

[1] Edward F. Moore. The shortest path through a maze. In Proceedings of the International Symposium on the Theory of Switching, pages 285–292. Harvard University Press, 1959.

[2] C. Y. Lee. An algorithm for path connection and its applications. IRE Transactions on Electronic Computers, EC-10(3):346–365, 1961.

BFS Pseudocode

G = The given graph = (vertex set V, edge set E).
s = The given *source* vertex.

```
BFS(G, s)
for each vertex u ∈ G.V − {s}
    u.color = WHITE
    u.d = ∞
    u.π = NIL
s.color = GRAY
s.d = 0
s.π = NIL
Q = ∅
ENQUEUE(Q, s)
```

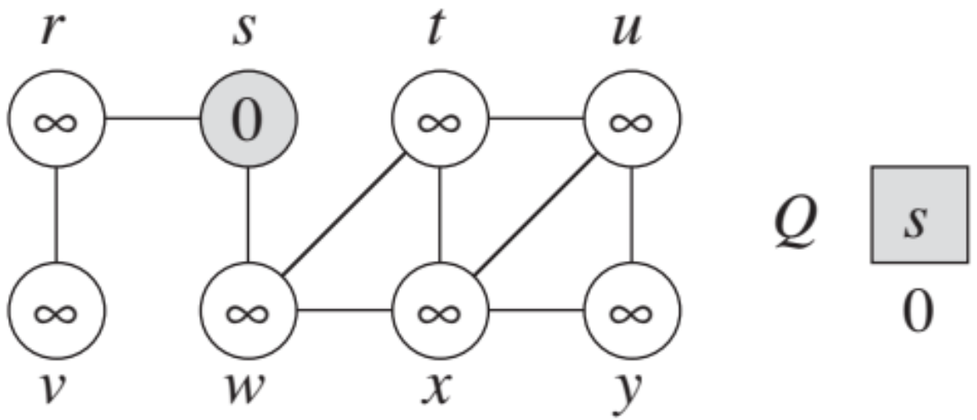

BFS Pseudocode

```
while Q ≠ ∅
    u = DEQUEUE(Q)
    for each v ∈ G.Adj[u]
        if v.color == WHITE
            v.color = GRAY
            v.d = u.d + 1
            v.π = u
            ENQUEUE(Q, v)
    u.color = BLACK
```

Before the for loop starts

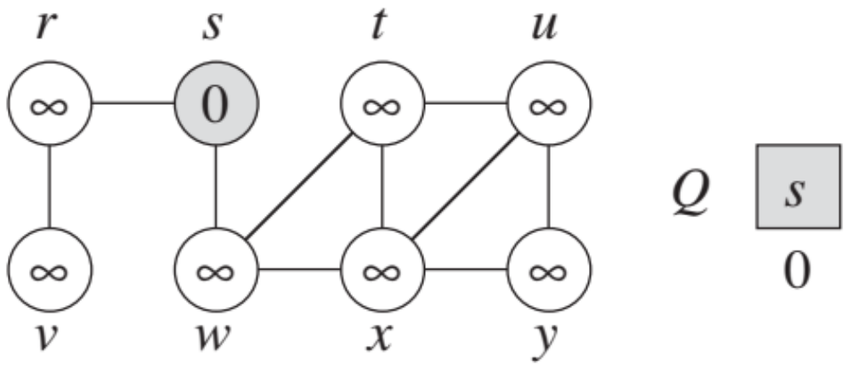

After the first iteration of the for loop

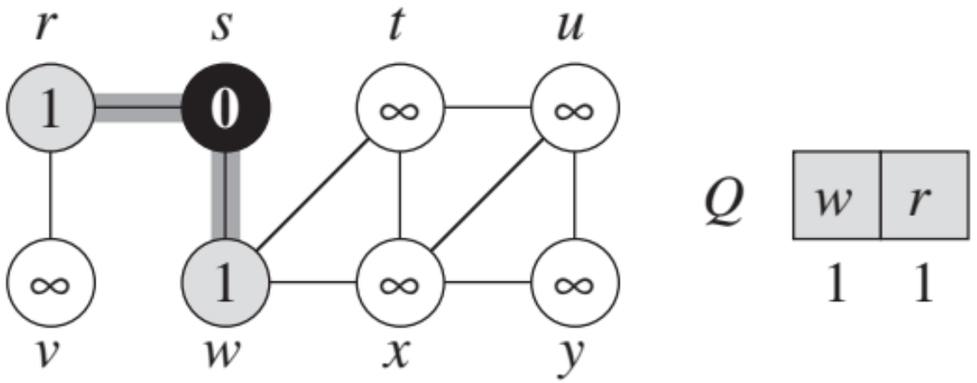

BFS Pseudocode (contd.)

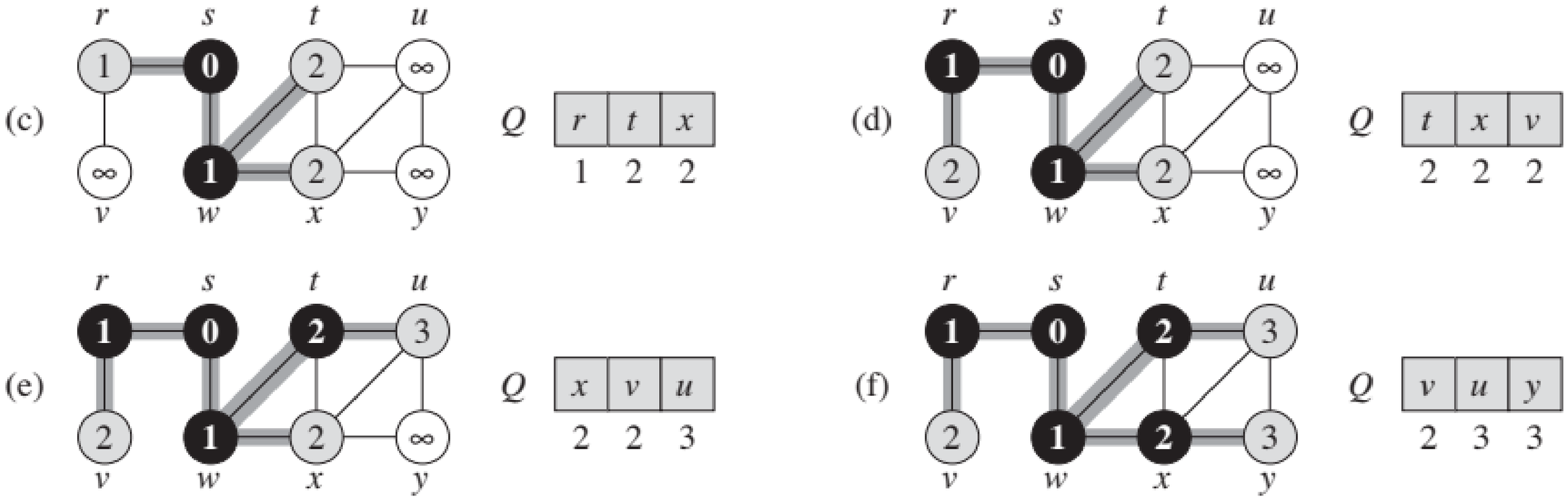

BFS Pseudocode (contd.)

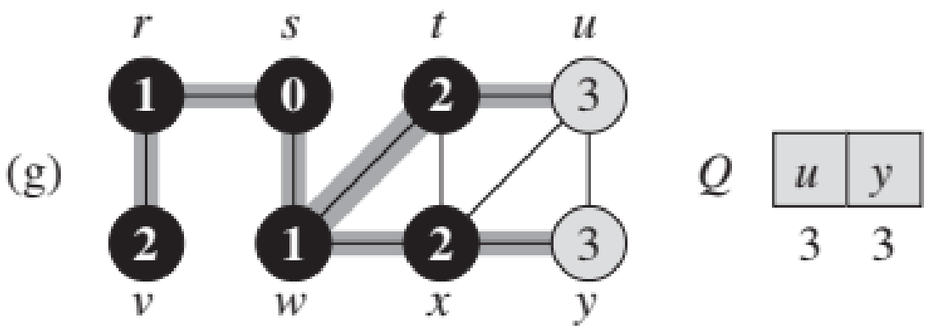

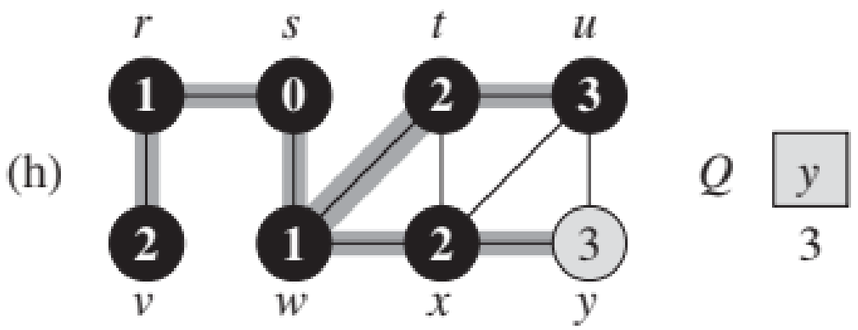

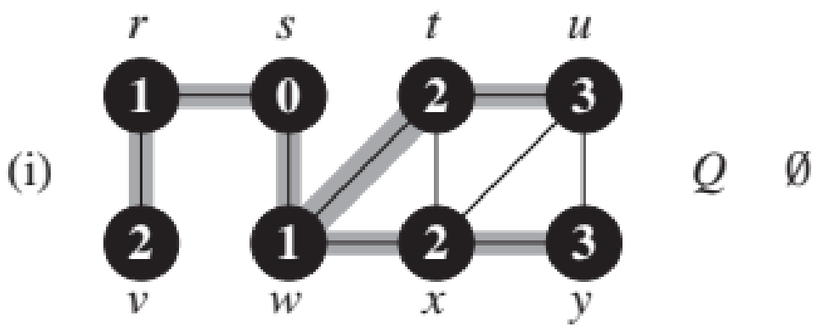

Depth-First Search (DFS)

French mathematician **Charles Pierre Trémaux** formulated the ‘backtracking’ method for solving mazes around 1876. This method was refined by the computer scientists in the early 1970s to develop the DFS algorithm.

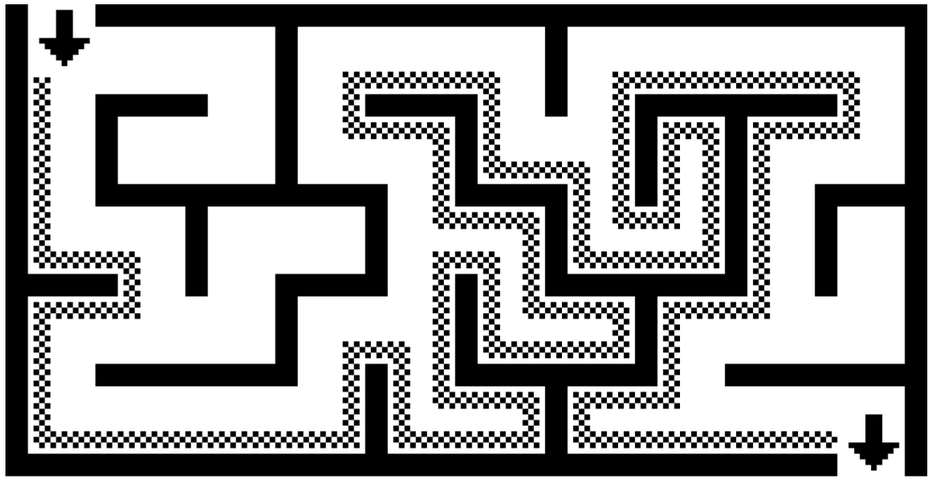

Maze Courtesy: Grufo, https://commons.wikimedia.org/wiki/File:Maze01-02.svg

DFS Pseudocode

```
DFS(G)
for each vertex u ∈ G.V
    u.color = WHITE
    u.π = NIL
time = 0
for each vertex u ∈ G.V
    if u.color == WHITE
        DFS-VISIT(G, u)
```

DFS Pseudocode (contd.)

```
DFS-VISIT(G, u)
time = time + 1                    // white vertex u has just been discovered
u.d = time
u.color = GRAY
for each v ∈ G.Adj[u]              // explore edge (u, v)
    if v.color == WHITE
        v.π = u
        DFS-VISIT(G, v)
u.color = BLACK                    // blacken u; it is finished
time = time + 1
u.f = time
```

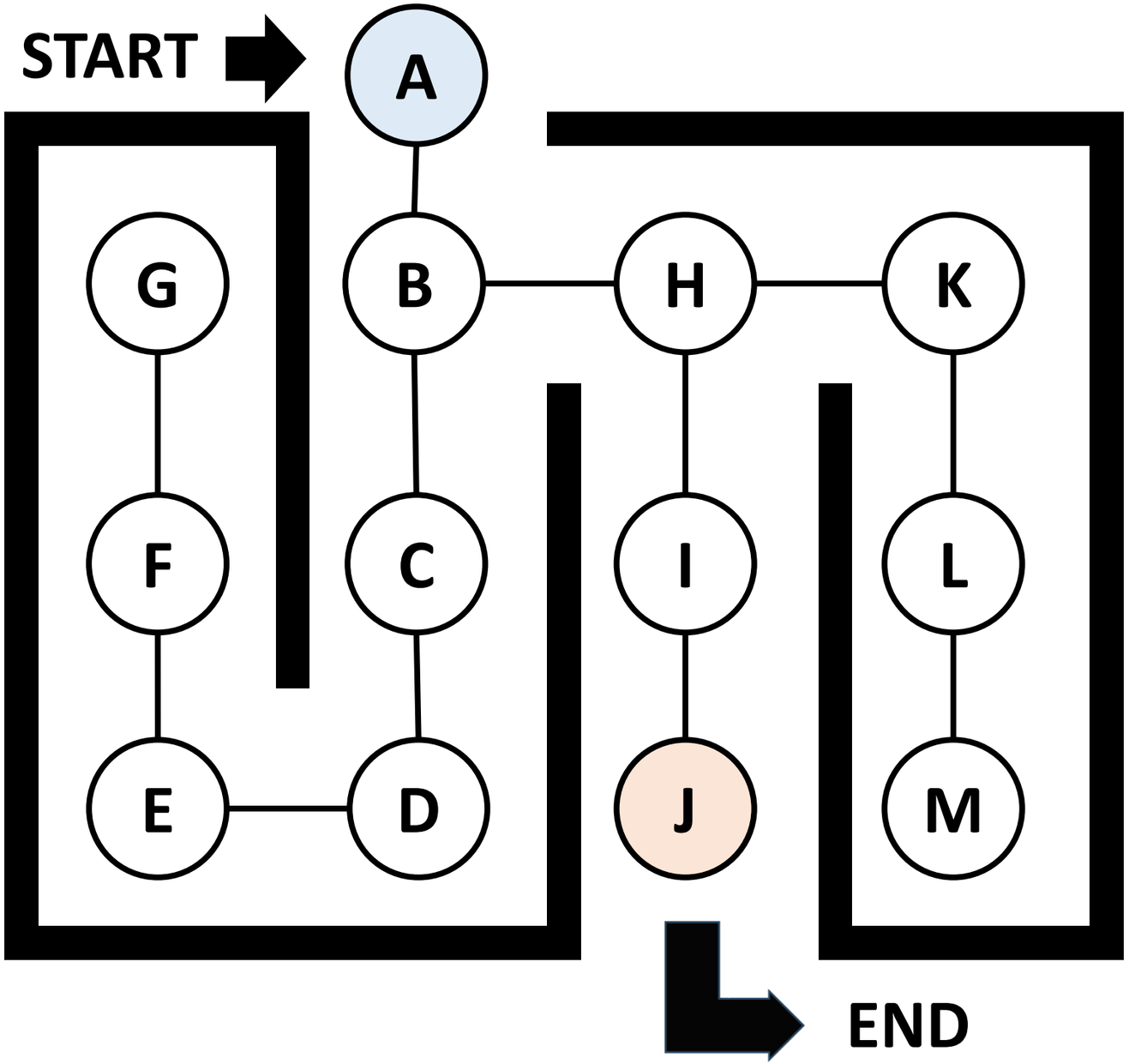

Practice Problem 1.
Please write a C program to solve the given maze. The vertices represent the permissible pixels for movement.

Maze courtesy:
https://www.mazegenerator.net/

Practice Problem 2. Please complete the pixel graph by appropriately adding more vertices and then write a C program to solve the maze: https://commons.wikimedia.org/wiki/File:Maze01-02.svg .

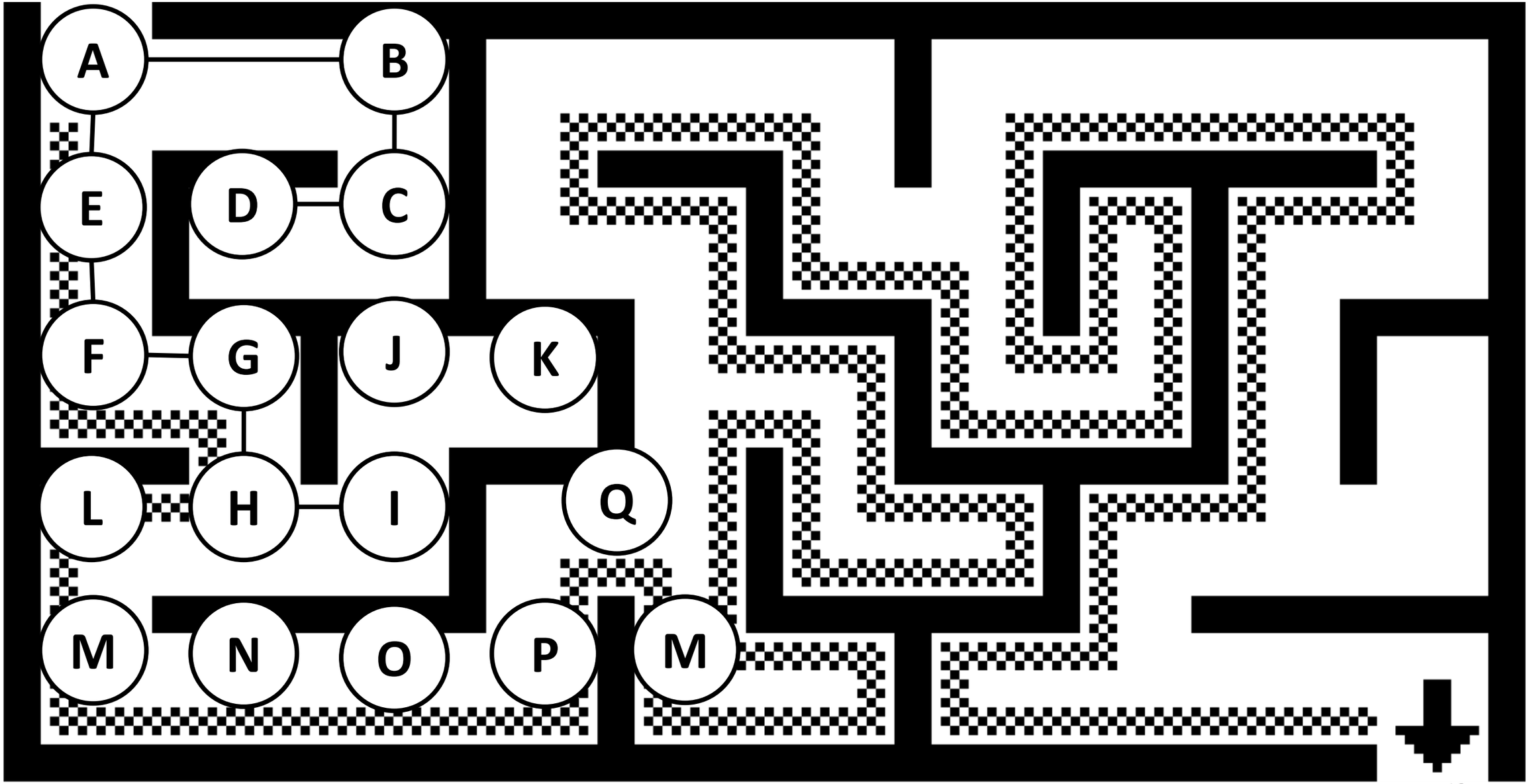

Happy Spring Break